INTERNSHIP
(22PW4EC301)

on

10T SRAM BASED IN MEMORY COMPUTING WITH TIG-FET

BACHELOR OF TECHNOLOGY
in
ELECTRONICS & COMMUNICATION ENGINEERING

Submitted by:

22071A04K5	S. ANKITH
23075A0424	K. SHIVA TEJA RAVINDER
23075A0426	T. ASHWINI

Under the Supervision of
Dr. S. RAJENDRA PRASAD
Professor
Department of ECE
VNRVJIET

Academic Year: 2024-25

DEPARTMENT OF ELECTRONICS AND COMMUNICATION ENGINEERING

VALLURUPALLI NAGESWARA RAO VIGNANA JYOTHI

INSTITUTE OF ENGINEERING AND TECHNOLOGY

An Autonomous Institute, NAAC Accredited with 'A++' Grade
NBA Accredited CE, EEE, ME, ECE, CSE, EIE, IT – B .Tech Programs
Approved by AICTE, New Delhi, Affiliated to JNTUH
Recognized as "College with Potential for Excellence" by UGC
Vignana Jyothi Nagar, Bachupally , Nizampet (S.O.), Hyderabad-500 090.Telangana, India.

VALLURUPALLI NAGESWARA RAO VIGNANA JYOTHI

INSTITUTE OF ENGINEERING AND TECHNOLOGY

An Autonomous Institute, NAAC Accredited with 'A++' Grade
NBA Accredited CE, EEE, ME, ECE, CSE, EIE, IT -B .Tech Programs
Approved by AICTE, New Delhi, Affiliated to JNTUH
Recognized as "College with Potential for Excellence" by UGC
Vignana Jyothi Nagar, Bachupally, Nizampet (S.O.), Hyderabad-500 090.Telangana, India.

DEPARTMENT OF ELECTRONICS AND COMMUNICATION ENGINEERING

TAMASOMA JYOTIRSAMAYA
Estd. 1995

CERTIFICATE

This is to certify that the Internship report titled "10T SRAM BASED IN MEMORY COMPUTING WITH TIG-FET" that is being submitted by S. ANKITH (22071A04K5), K. SHIVA TEJA RAVINDER (23075A0424), T.ASHWINI(23075A0426), for the fulfillment of the Internship course at VI-Sem. of Bachelor of Technology in Electronics & Communication Engineering of the VNRVJIET, Hyderabad during the academic year 2024-25 is a record of bonfide work carried out by him/her under our guidance and supervision.

SUPERVISOR
Dr. S. RAJENDRA PRASAD
Professor
Department ECE
VNRVJIET

HEAD OF THE DEPARTMENT
Dr. Lam Padma Sree
Professor and Head
Department ECE
VNRVJIET

ACKNOWLEDGEMENTS

We are indebted to Dr. C. D. NAIDU, Principal, VNRVJIET, for his help and guidance in our work. We consider ourselves fortunate to have obtained his friendly and valuable advice during the course of our internship.

Our sincere thanks to Dr. Lam Padma Sree, Professor, Head of theDepartment, ECE, VNR VJIET, for her esteemed guidance and encouragement provided during the course of our internship.

We would like to express our sincere thanks to Dr. S. RAJENDRA PRASAD Professor, Dept. of ECE, VNRVJIET, for his precious guidance and kind cooperation at every step of this Internship.

We are thankful to all the staff members of the ECE department, VNRVJIET, for helping us during this Internship.

We are thankful to all the Internship committee members of ECE department, VNR VJIET, for helping us during this Internship.

Finally, we are very thankful to our family members and our friends for theirgreat moral support.

22071A04K5	S. ANKITH
23075A0424	K. SHIVA TEJA RAVINDER
23075A0426	T. ASHWINI

Abstract

The growing demand for energy-efficient and high-performance computing has driven the exploration of Logic-in-Memory (LiM) architectures to overcome the limitations of traditional von Neumann systems. This project presents the design and simulation of a **10-transistor (10T) SRAM-based LiM module**, initially implemented using **CMOS technology** and later transitioned to **Tunneling Impact Gate Field-Effect Transistor (TIGFET)** technology for enhanced energy efficiency. To enable logic operations within memory, we utilized a novel approach based on the **Wired AND** concept. By connecting the bit lines of two SRAM cells, we successfully created logic scenarios capable of performing **bitwise AND** operations directly within the memory array. This concept was extended to realize other fundamental logic gates, including NAND, NOR, and XOR, by strategically controlling the word lines and bit lines. The designs were simulated and validated to demonstrate correct read and write functionality along with reliable in-memory logic execution. The shift to TIGFET technology further optimized the design in terms of power consumption and transistor-level efficiency, making it a promising candidate for future low-power LiM architectures.

TABLE OF CONTENTS

CONTENTS.....PAGE NO

CHAPTER 1 -INTRODUCTION TO IN-MEMORY COMPUTING 8

CHAPTER 2- LITERATURE SURVEY .....

2.1 Introduction.....9

2.2 CMOS Technology.....9

2.2.1 Advantages of CMOS transistor.....12

2.2.2 Drawbacks of CMOS transistor.....12

2.3 TIGFET 13

2.3.1 Advantages of TIGFET 14

2.3.2 Drawbacks of TIGFET.....15

2.4 Literature Survey.....15

CHAPTER 3- Design And Analysis of Different VLSI Circuits using In Memory Computing with TIG FET .....

3.1 Introduction 18

3.2 Write Operation into 10T SRAM Cell 19

3.3 Read Operation into 10T SRAM Cell.....19

3.4 Design of a 2-Input AND Using IMC 19

3.5 Design of a 2-Input OR Using IMC 20

3.6 Design of a Full Adder Using IMC.....20

3.7 Design of 2-input MUX Using IMC 21

CHAPTER 4- RESULTS.....22

4.1 Introduction 22

4.2 Power Measurement 22

4.3 Propagation Delay 23

4.4 Simulation Results.....23

4.4.1 writing 1 into 10T SRAM Cell.....23

4.4.2 2 writing 0 into 10T SRAM Cell.....24

4.4.3 2-Input AND Using IMC 25

4.4.4 2-Input OR Using IMC… 26

4.4.5 Full adder Using IMC …..... …..27

4.4.6 2-bit Multiplexer 28

CHAPTER 5- CONCLUSIONS AND FUTURE SCOPE..... 20

5.1 Introduction 30
5.2 10T SRAM 30
5.3 AND Gate……..30
5.4 OR Gate…….30
5.5 Full Adder……..30
5.6 2x1 Multiplexer ……30
5.7 Future scope..... 31

REFERENCES 32

LIST OF FIGURES:

FIGURES LIST ..... PAGE NO

Fig 2.1: CMOS Inverter 9

Fig 2.2: V-I characteristics of p channel and n channel MOSFETs 10

Fig 2.3: structure of NMOS transistor 11

Fig 2.4: structure of PMOS transistor 11

Fig 2.5: Schematic of Pfet & Nfet 14

Fig 2.6 TIG FET Inverter……..14

Fig. 3.1: Schematic of 10T SRAM 18

Fig. 3.2: And gate configuration 19

Fig. 4.1: Output waveform of 10T SRAM Cell Storing value 1 23

Fig. 4.2: Output waveform of 10T SRAM Cell Storing value 0 24

Fig. 4.3: Output waveform of AND gate 25

Fig. 4.4: Output waveform of OR gate… 26

Fig. 4.5: Output waveform of Full Adder 27

Fig. 4.6: Output waveform of MUX … 28

LIST OF TABLES

TABLES LIST ..... PAGE NO

Table 4.1: Table which shows the comparison of various parameters of CMOS, TIGFET technologies

Chapter 1. INTRODUCTION TO IN-MEMORY COMPUTING

The traditional **von Neumann architecture**, which separates memory and processing units, has long been the foundation of modern computing systems. However, as computational demands increase, especially in data-intensive and energy-constrained applications, this architecture faces significant performance limitations. Chief among these are the **memory wall**, **power wall**, and **instruction-level parallelism wall**, which collectively hinder efficient data processing. These bottlenecks arise primarily from the extensive data movement required between memory and processing units, leading to increased energy consumption and latency.

To overcome these challenges, the research community has increasingly turned toward **Logic-in-Memory (LiM)** and **In-Memory Computing (IMC)** architectures. These emerging paradigms aim to integrate logic operations directly within memory arrays, thereby **minimizing data transfer overhead**, **reducing energy consumption**, and **improving computational throughput**. By co-locating computation and storage, LiM and IMC not only alleviate the limitations of the von Neumann model but also pave the way for more **parallel**, **energy-efficient**, and **scalable** computing systems.

Among various memory technologies, **Static Random Access Memory (SRAM)** has gained prominence due to its speed, compatibility with standard CMOS processes, and potential for logic integration. Recent research has focused on enhancing SRAM-based IMC modules to support **bitwise operations**, **arithmetic functions**, and even **programmable logic**, all while maintaining low power profiles. Additionally, **non-volatile memories (NVMs)** such as **RRAM** and **memristors** offer alternative pathways toward highly programmable and energy-efficient LiM implementations.

This review explores recent advancements in SRAM-based and NVM-based in-memory computing solutions. It discusses innovative cell designs, such as 8T and 10T SRAM configurations, dual-directional read mechanisms, and IMPLY logic circuits, highlighting their contributions to improving speed, energy efficiency, and computational robustness across diverse application domains.

2.Literature Review

2.1 INTRODUCTION:

In this chapter we are discussing CMOS technology, TIGFET technology

2.2 CMOS Technology

CMOS (Complementary Metal-Oxide-Semiconductor) technology is widely used in integrated circuits, including static RAM, microprocessors, microcontrollers, and various digital systems. The term *complementary* refers to the use of both P-type and N-type MOSFETs in a symmetrical arrangement for logic circuit implementation (see Figure 2.1). Two of the most significant features of CMOS devices are their extremely low leakage power and high noise immunity. During operation, only one of the transistors (either PMOS or NMOS) is active at a time, which greatly reduces power consumption and heat generation. CMOS is a foundational technology in VLSI (Very Large-Scale Integration) design.

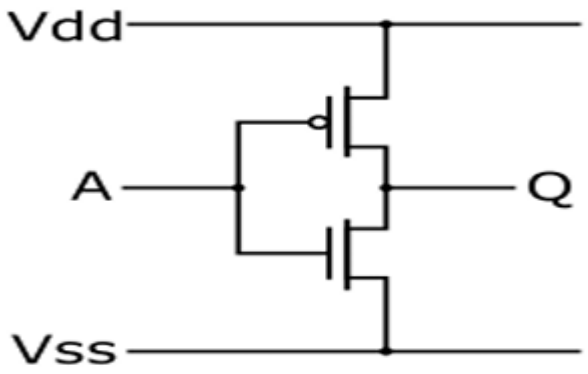

Figure 2.1: CMOS Inverter

CMOS circuits are composed of both NMOS (n-type Metal-Oxide-Semiconductor) and PMOS (p-type Metal-Oxide-Semiconductor) transistors. As illustrated in Figure 2.4, NMOS transistors are built on a p-type substrate by creating an n-type channel. When a voltage is applied to the gate terminal, this n-channel allows electrons to flow between the source and drain terminals. NMOS transistors, like other MOSFETs, operate in four regions: cut-off, triode, saturation (also known as active mode), and velocity saturation. Figure 2.2 displays the current-voltage (V-I) characteristics of an NMOS, while Figure 2.3 provides a comparison of Vds vs. Id curves for both NMOS and PMOS.

NMOS devices come in two variants: enhancement mode and depletion mode. In enhancement mode, NMOS transistors are typically used in the pull-down network, connecting the output to the negative supply voltage (Vss).

Logic functions can be created by arranging NMOS and PMOS transistors in series or parallel combinations, based on the circuit requirements. PMOS transistors, on the other hand, are built on an n-type substrate using a p-type channel. When voltage is applied to the gate terminal, the p-channel forms and permits hole conduction between the source and drain. Like NMOS, PMOS transistors also operate in four distinct modes: cut-off, triode, saturation, and velocity saturation. However, a major limitation of PMOS devices is that they allow direct current (DC) flow, which can cause power dissipation when the pull-up network is active and the output remains high, especially during idle states.

One of the performance drawbacks of PMOS is its slower transition from a high to a low state. In contrast, the low-to-high transition is faster because the PMOS can quickly charge the output capacitance due to its low resistance. The greater resistance between the output and the supply terminal during high-to-low switching leads to slower operation. Reducing this resistance can enhance circuit speed and simultaneously improve power efficiency by lowering leakage losses.Traditional von Neumann architectures are increasingly constrained by the **memory wall**, **power wall**, and **instruction parallelism wall**, which hinder efficiency in data-intensive applications. To address these challenges, researchers have turned toward **Computation-In-Memory (CIM)**, an emerging paradigm that embeds processing capabilities directly within memory units, significantly reducing data movement and energy consumption.

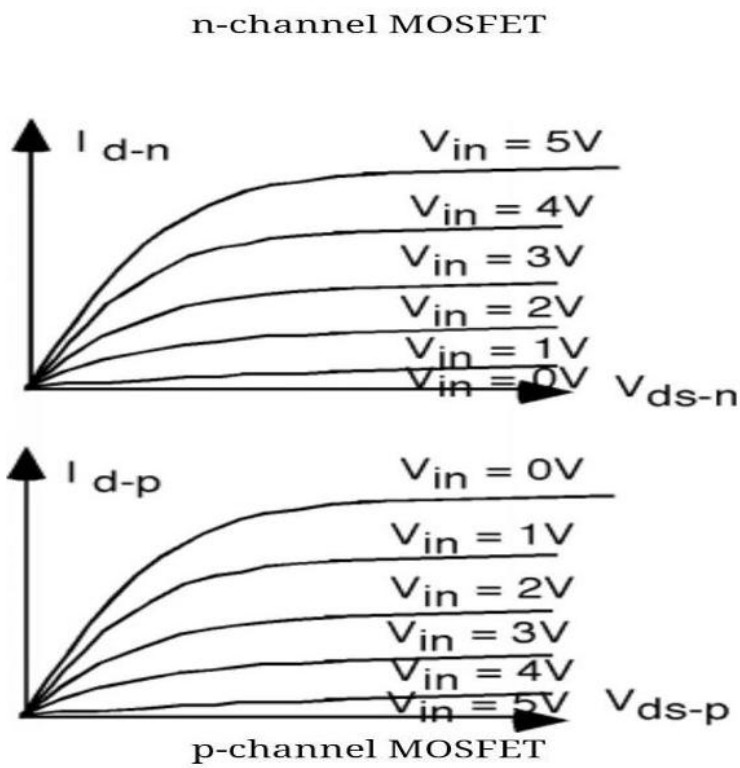

Figure-2.2 V-I characteristics of p and n channel MOSFETs.

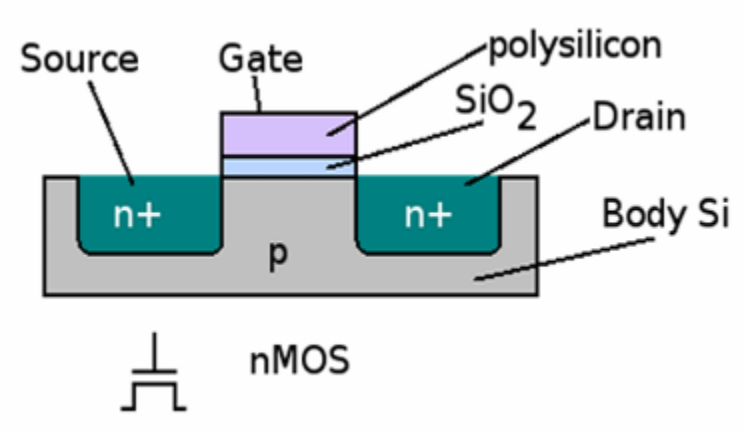

Figure 2.3 Structure of NMOS

According to Figure 2.1, **P-type MOSFETs (PMOS)** are used in the **pull-up network**, positioned between the positive supply voltage (VDD) and the output of the logic gate. Additionally, a resistor is typically placed between the logic gate output and the negative supply voltage (Vss). This setup ensures that when a high output is needed, the pull-up network becomes active.

PMOS gate structures can mirror those of NMOS gates when all voltages are logically inverted. In circuits using active-high logic levels, **De Morgan's Theorem** illustrates that an NMOS NAND gate is structurally equivalent to a PMOS NOR gate, and similarly, an NMOS NOR gate corresponds to a PMOS NAND gate when viewed through logic inversion.

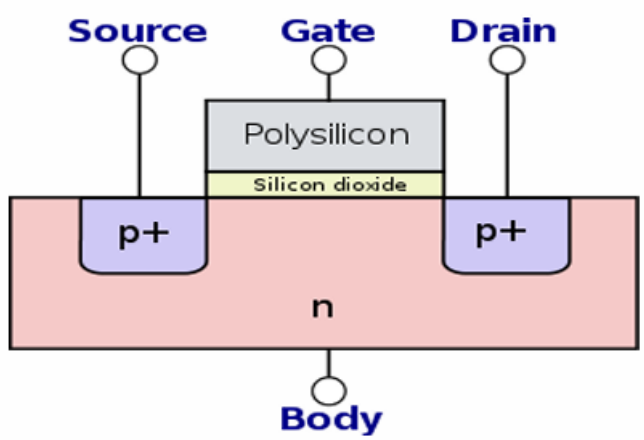

Figure-2.4 Structure of NMOS

2.2.1 Advantages of CMOS Transistors:

1. **Excellent Noise Immunity:** CMOS devices offer strong resistance to electrical noise, with a nearly perfect inverter voltage transfer curve and clear logic level margins (VOL = 0, VOH = Vdd).
2. **Low Power Usage:** They consume minimal power since, during any state change, only one of the transistors (either NMOS or PMOS) conducts, while the other remains off.
3. **Compact Design:** CMOS circuits occupy less space as they can share diffusion regions. Additionally, they are well-modeled and thoroughly characterized for efficient performance.
4. **Robust Construction:** These circuits are mechanically reliable and highly suitable for dense integration on chips.
5. **Support for Analog Components:** Analog CMOS processes often incorporate non-salicided polysilicon resistors, which exhibit good linearity.
6. **Zero Static Power Consumption:** As there's no continuous path from Vdd to ground, they don't draw any DC power in steady-state conditions.
7. **Energy-Efficient and Simple Supply:** They operate with low power and require only a single voltage source for functionality.
8. **Highly Scalable Integration:** CMOS technology supports very high levels of integration and generally needs only one system clock.

2.2.2 Disadvantages of CMOS Transistors:

1. **Higher Complexity and Component Count:** CMOS designs typically involve more transistors, making the fabrication process more intricate.
2. **Size Imbalance for Symmetry:** To achieve balanced performance, PMOS transistors need to be larger than their NMOS counterparts.
3. **Lower Light Sensitivity:** In CMOS sensors, the light-sensitive area (fill factor) is relatively small.
4. **Scaling Limitations:** Although shrinking CMOS dimensions is driving technological progress, further scaling introduces challenges like short-channel effects, increased leakage currents, process variability, and reduced reliability.
5. **Electrostatic Sensitivity:** CMOS devices can be easily damaged by static electricity if not handled properly.
6. **Unused Input Precautions:** All CMOS input pins must be connected either to high or low logic levels, as floating inputs can lead to unpredictable behavior.
7. **Thermal Issues:** Silicon chips based on CMOS can heat up rapidly and may struggle to dissipate this heat efficiently, potentially leading to thermal failures or chip damage.

2.3 TIG-FET Technology

The **Three-Independent-Gate Field-Effect Transistor (TIGFET)** is a novel transistor structure that extends the traditional FET architecture by incorporating three independently controllable gates. Unlike standard MOSFETs, which have a single gate to control current flow between the source and drain, TIGFETs allow more precise and flexible control over the channel using three separate gate terminals. This unique structure enables dynamic control of threshold voltage and device behavior, making TIGFETs suitable for reconfigurable logic, power-efficient circuits, and multi-function logic elements in VLSI systems.

A particularly interesting feature of TIGFETs is their **ability to mimic both n-type and p-type MOSFET behavior** through external gate biasing. If any **two of the three gates are shorted together and connected to ground (0 V)**, and the third gate is used as the input signal, the device behaves similarly to a **p-type MOSFET**. This is because the grounded gates create a channel condition favorable for hole conduction when the input gate is low. In this configuration, the device turns **ON** when the input signal is low (like PMOS) and turns **OFF** when the input is high.

Conversely, if the **two shorted gates are tied to VDD (supply voltage)** and the third gate is used as the input, the TIGFET acts like an **n-type MOSFET**. The high voltage on the paired gates creates an electric field that favors electron conduction. When the input gate is high, the device turns **ON**, and when the input is low, it turns **OFF**, mimicking standard NMOS behavior. This dynamic configurability allows the same physical device to act as either an NMOS or PMOS based on gate voltages, enabling highly compact and flexible logic designs.

This ability to configure TIGFETs as either n-type or p-type transistors **on the fly** reduces the number of physical transistors needed to implement logic functions and supports **reconfigurable computing architectures**. It also simplifies the design of logic gates and allows for the creation of compact programmable logic blocks. As CMOS scaling faces physical limitations, TIGFET technology offers a promising alternative for next-generation low-power and high-density digital circuits.

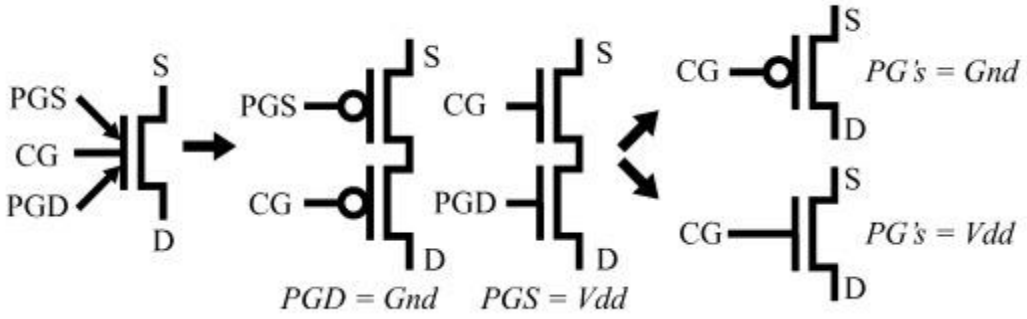

Figure-2.5 Schematic of Pfet & Nfet

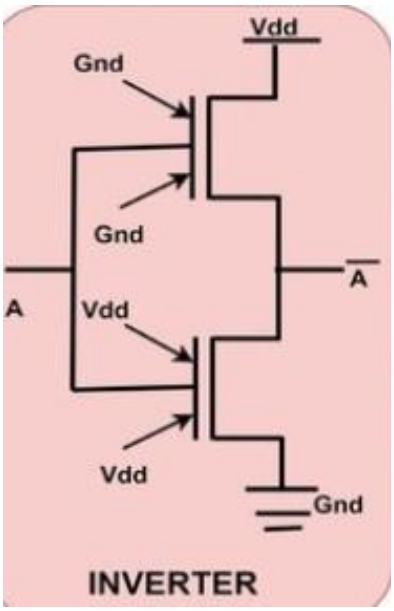

Figure-2.6 TIG FET Inverter

2.3.1 Advantages of TIGFET (Three-Independent-Gate FET):

1. **Enhanced Electrostatic Control:** With three independently controlled gates, TIGFETs offer superior control over the channel potential, reducing short-channel effects more effectively than FinFETs.
2. **Dynamic Threshold Control:** The independent gates allow for real-time modulation of threshold voltage, enabling adaptive performance and power management based on workload demands.

3. **Improved Logic Functionality:** TIGFETs support multiple logic operations within a single device due to independent gate control, allowing logic-in-memory and compact multi-functional circuits.
4. **Low Leakage Current:** The tight control over the channel reduces subthreshold leakage and improves power efficiency in both active and standby modes.
5. **Increased Design Flexibility:** Designers can exploit the independent gates for reconfigurable logic, multi-threshold operation, and fine-tuned power-performance trade-offs

2.3.2 Disadvantages of TIGFET (Three-Independent-Gate FET):

1. **Increased Fabrication Complexity:** Manufacturing TIGFETs involves advanced 3D structures and precise alignment of multiple gates, making the process significantly more complex than FinFETs or CMOS.
2. **Challenging Gate Control and Isolation:** Managing three independently biased gates without interference requires sophisticated gate insulation and layout strategies.
3. **Design and Modeling Difficulties:** Conventional CAD tools and SPICE models are not readily compatible with TIGFETs, requiring specialized models and simulation environments.
4. **Lack of Standardization:** TIGFETs are still in the research or early development phase, with limited industrial adoption and no standardized fabrication flow.
5. **Higher Parasitic Capacitance:** The presence of multiple gates can lead to increased parasitic capacitance, which may affect switching speed and energy efficiency in some configurations.

2.4 Literature Review

A promising approach involves using **8T SRAM cells** in 180 nm CMOS technology for implementing Boolean logic operations such as NAND, AND, NOR, and OR. The proposed design includes a novel sensing scheme, enhancing energy efficiency by 26.4% compared to 8+T SRAM-based IMC designs, and features a high sensing margin for NAND operations. Furthermore, this work successfully demonstrates arithmetic logic functionalities, including half-adders and half-subtractors, validating the potential of 8T SRAM-based in-memory computing systems [6].

Building on this, another study presents an **IMC full adder (FA)** design utilizing an 8+T SRAM cell that supports both **read** and **bitwise** operations. This architecture aims to mitigate the von Neumann bottleneck by enabling logic functions directly within memory, thus reducing latency and improving computational efficiency for embedded systems [5].

To further improve robustness and energy efficiency, novel **10T SRAM-based architecture** is proposed. The design leverages additional transistors to enhance stability and support reliable in-memory computations. It targets energy-constrained environments such as embedded systems and

HPC, addressing issues of performance and power consumption while maintaining resilience to variability [3].

Another enhancement to the 10T SRAM architecture involves **two-directional in-memory computing** using a cross-layout of word lines to decouple horizontal and vertical read ports. This design eliminates the limitations of vertical data access and improves stability during in-memory operations, offering greater flexibility and efficiency for logic execution within the SRAM matrix [4].

The integration of logic and memory in a single unit is further advanced through a proposed **Logic-In-Memory (LiM) module** that operates within a remarkably low energy range of **0.01–2.78 aJ per operation**. This system capitalizes on SRAM cells to perform both storage and logic functions, with an emphasis on optimizing speed and energy efficiency. The approach shows promising applications in high-performance and low-power embedded systems [2].

Beyond SRAM-based solutions, **non-volatile memory technologies**, such as **Resistive RAM (RRAM)**, have emerged as alternatives for in-memory computing. One study introduces **S-IMPLY**, an improved logic scheme using RRAM that mitigates issues like logic state degradation and limited flexibility. Through a physics-based model and enhanced peripheral circuitry, the proposed method achieves improved reliability and low energy consumption. A 4-bit full adder implementation using S-IMPLY demonstrates its competitiveness against existing LiM technologies [7].

Finally, **memristive circuits** offer the capability for both logic and storage operations within a unified structure. A fully programmable in-memory computing system is introduced, featuring a lightweight control unit to manage in-memory operations efficiently. By supporting assembly-level programming with majority and complement logic, the system enables adaptable applications. A case study on symmetric-key encryption validates its practical utility, especially in lightweight security applications [8].

Comparison:

Work	Technology	Logic Type	Key Features	Target Application
Fast & Energy-Efficient LiM	SRAM	Logic & Storage	0.01–2.78 aJ/op	Embedded, HPC
10T SRAM IMC	SRAM (10T)	Logic-in-Mem	Robust & low-power	IoT, HPC
Two-Directional SRAM	SRAM (10T)	Horizontal & Vertical logic	Dual-port operation	Parallel IMC
8+T Full Adder	SRAM (8+T)	Logic & Read	Simultaneous operation	Arithmetic units
8T SRAM Logic	SRAM (8T)	Boolean Logic	NAND, OR, HA, HS	CMOS-based IMC
S-IMPLY	RRAM	IMPLY logic	Reliable & efficient	Energy-constrained systems
Memristive System	Memristor	Programmable logic	Cipher implementation	Secure embedded devices

CHAPTER 3

Design And Analysis of Different VLSI Circuits using TIG FET

3.1 Introduction

Static Random Access Memory (SRAM) is a fundamental component in high-speed cache and memory applications due to its fast access time and low power consumption. The traditional 6-transistor (6T) SRAM cell, while widely used, suffers from stability issues, especially in low-voltage and sub-threshold operations. To overcome these limitations, researchers have proposed alternative SRAM architectures, among which the 10-transistor (10T) SRAM cell has gained significant attention.

The 10T SRAM cell enhances read and write stability by decoupling the read and write operations through separate access paths. It typically includes two additional transistors for read isolation and two for write assist, ensuring improved read static noise margin (RSNM) and write ability. This makes the 10T cell particularly suitable for low-power and low-voltage applications such as portable electronics and near-threshold computing.

Moreover, the 10T design reduces the risk of read-disturb failures, improves data retention, and provides better support for bit-interleaved memory arrays by enhancing soft error immunity. However, these benefits come at the cost of increased area and slightly higher leakage power compared to the conventional 6T cell.

Overall, the 10T SRAM cell architecture offers a robust and reliable solution for modern VLSI designs that demand both high performance and low power consumption under aggressive voltage scaling.

10T SRAM Cell Schematic View:

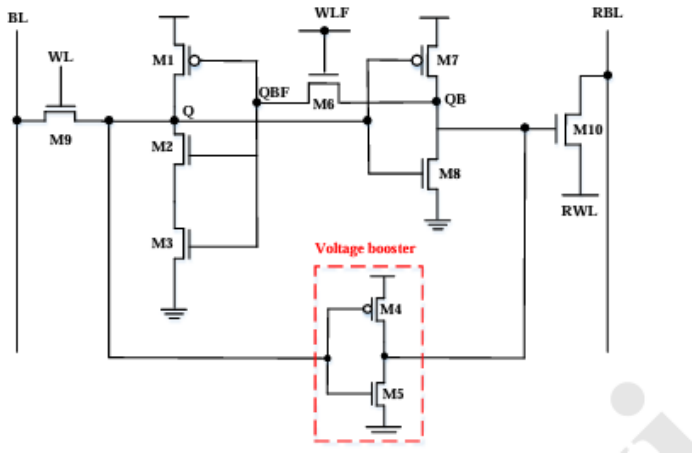

Figure-3.1 Schematic of 10T SRAM

3.2 Operation:

In a write operation, the word line (WL) is asserted high, turning ON access transistors M1 and M2. This allows the bit line (BL) to force a logic value onto node Q, while the complementary bit line (not shown in the image but typically present) would drive QB. Depending on the desired data, the voltages on BL and its complement set the Q and QB nodes accordingly. The cross-coupled inverters formed by M1–M3 and M7–M8 latch the new data. To enhance writing efficiency and ensure correct flipping of the internal storage nodes even in degraded supply conditions, a voltage booster circuit comprising transistors M4 and M5 is employed. This booster helps to raise the gate voltage, improving write margin and overall cell stability.

3.3 Read Operation:

During a read operation, the word line (WL) is grounded, and the read bit line (RBL) is precharged to the supply voltage If the stored data in the SRAM cell is such that node Q = '0' and QB = '1', the read path becomes active. The transistor M10, whose gate is controlled by QB, turns ON, enabling the discharge of RBL through M10. As a result, the sensing amplifier detects a voltage drop on RBL, indicating a stored '0'. Conversely, if QB = '0', M10 remains OFF, and RBL stays at VDD, denoting a stored '1'. The key advantage here is that the gate of the read transistor M10 is connected directly to node QB, which prevents any charge sharing between RBL and QB. Additionally, an NMOS transistor (M6) between QB and QBF helps in further isolating the read and storage nodes, thus preserving data integrity during the read process.

3.4 Design of a 2-Input AND using IMC:

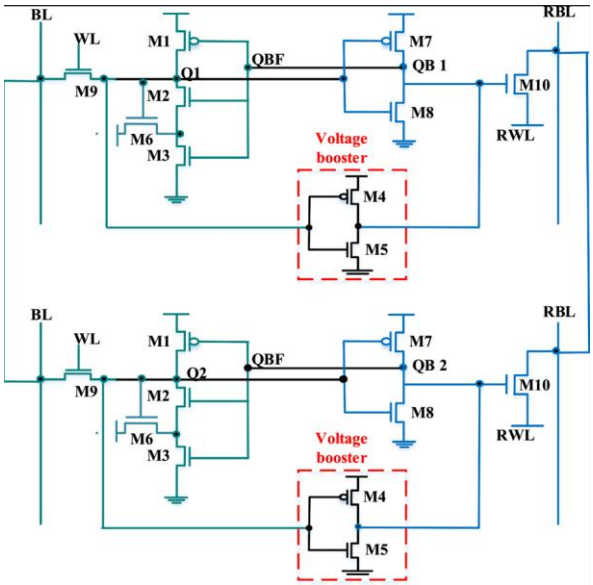

Figure-3.2 And gate configuration

In the presented Logic-in-Memory (LiM) configuration, the AND logic operation is realized by leveraging two 10-transistor (10T) SRAM cells whose **bit lines (BL)** are shorted together. The operation utilizes the **true storage nodes Q1 and Q2** from each SRAM cell to determine the logic output. When both Q1 and Q2 store logic high ('1'), there is no conductive path from the shared BL to ground through the access transistors, allowing the bit line to **remain at a high voltage level**, which is interpreted as logic '1'. However, if either Q1 or Q2 holds a logic low ('0'), the corresponding transistor in that cell creates a **pull-down path to ground**, causing the shared BL to discharge. This results in a logic '0' output. Therefore, the shared bit line will remain high **only when both Q1 and Q2 are high** and will discharge (go low) if **either or both are low**. This behavior mirrors the truth table of a standard AND gate, where the output is high only when all inputs are high. Thus, the interconnection of the SRAM cells and the charge-based interaction on the shared BL effectively implements an in-memory AND logic operation without the need for additional logic circuitry

3.5 Design of a 2-Input OR using IMC:

The OR logic operation in the memory cell utilizes the storage nodes **QB1** and **QB2**. These nodes represent the complementary data stored in the corresponding SRAM cells. The OR gate function is activated when either QB1 or QB2 is high (logic 1). In such a case, a conductive path is not established to the ground, and the bitline retains its charge, indicating a logical high output. However, if both QB1 and QB2 are low (logic 0), there exists at least one active conduction path to the ground, resulting in the **discharge of the bit line**. This behavior aligns with the logical OR truth table, where the output is low only when **both inputs are 0**, and high otherwise.

3.6 Design of a 2-Input Full Adder using IMC

A full adder is a digital circuit that adds three binary inputs: two significant bits (A and B) and a carry-in bit (Cin). It produces two outputs: the sum (S) and a carry-out (Cout). The sum output is the result of the binary addition of A, B, and Cin, while the carry-out indicates whether there is an overflow that needs to be carried to the next higher bit. Internally, a full adder is often built using two half adders and an OR gate. The first half adder adds A and B, producing a partial sum and carry. The second half adder adds the partial sum with Cin, and the OR gate combines the two carry outputs to produce Cout

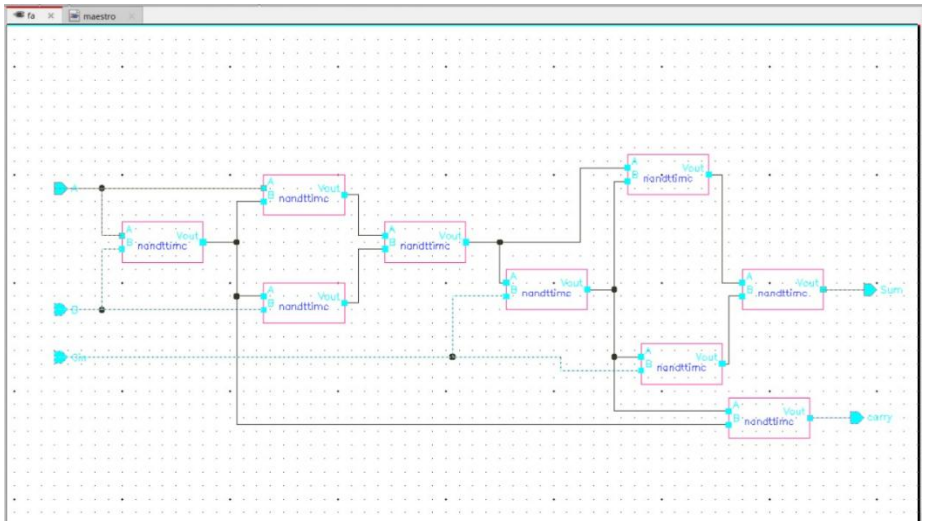

3.7 Design of a 2-Input Multiplexer (2×1 MUX) using IMC :

A 2-to-1 multiplexer (2×1 MUX) is a digital circuit that selects one of two input signals (labeled as **A** and **B**) and forwards the selected input to a single output line (**Vout**) based on the value of a **select line** (**S**). When the select line **S** is 0, the output **Vout** is equal to input **A**; when **S** is 1, the output **Vout** is equal to input **B**. The logical expression for the output is: $\mathbf{Y = S \cdot A + \overline{S} \cdot B}$, where $\overline{\mathbf{S}}$ is the complement of the select signal. A 2×1 MUX is commonly used in digital systems for data routing, implementing logic functions, and selecting between different control or data signals

CHAPTER 4. Results:

4.1 Introduction:

The digital circuits such as **AND**, **OR**, **Full Adder**, and **Multiplexer** are designed using **In-Memory Computing (IMC)** architecture based on **Three-Independent-Gate Field-Effect Transistor (TIGFET)** technology. These circuits are simulated and analyzed to evaluate their functionality and performance. The simulation results are clearly presented and discussed in this chapter.

In today's technology-driven world, the demand for digital systems with **low power consumption** and **high-speed operation** is rapidly increasing. To meet these demands, performance metrics such as **static power**, **propagation delay**, and **dynamic power** are considered for evaluation. These parameters are used to compare the efficiency of TIGFET-based IMC circuits with those implemented using conventional CMOS and emerging transistor technologies. This study demonstrates the potential of TIGFETs in enabling **energy-efficient and high-performance** computing systems, particularly for **in-memory computing applications**.

4.2 Power measurement:

This section discusses the methods used to characterize the power consumption of a library cell. The total power dissipation is typically divided into two components: static power and dynamic power.

Static Power refers to the energy consumed when the circuit is not undergoing any switching activity. This type of power loss mainly arises due to leakage currents and subthreshold conduction.

Dynamic Power, on the other hand, is associated with the switching activity within the circuit and constitutes the major portion of power dissipation in digital systems. Modern research places significant emphasis on minimizing dynamic power. It can be further divided into **switching power** and **internal power**.

- *Switching power* is the energy consumed during the charging and discharging of external load capacitances driven by the cell.
- *Internal power* results from short-circuit currents that flow during transitions and the charging/discharging of internal capacitances within the cell

4.3 Propagation delay:

When signals pass through logic circuits, there is a certain amount of delay before the output responds. This is known as **gate delay** or **propagation delay**. It represents the time a logic gate takes to react to changes at its inputs. In essence, propagation delay is the average time required for the output to reflect a change after the input has been altered.

4.4 Simulation Results

4.1.1 Writing 1 into 10T SRAM Cell

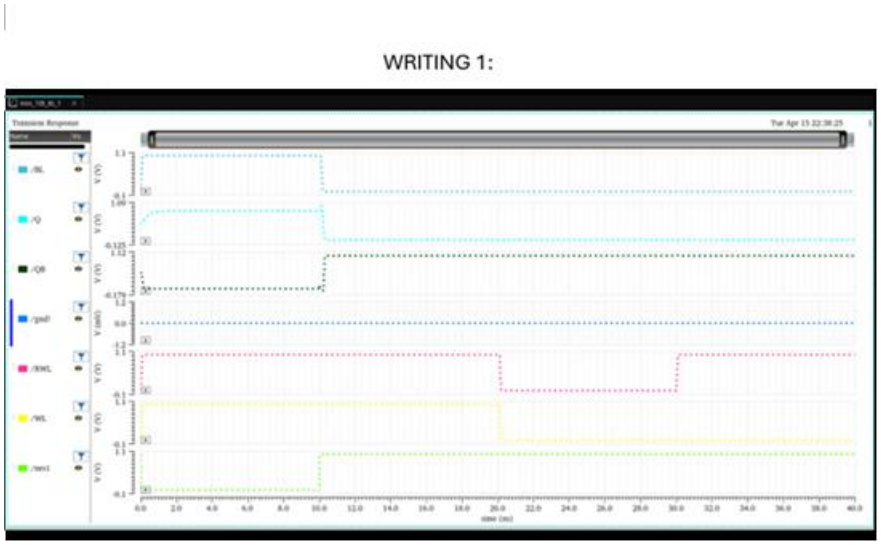

Figure-4.1 Output waveform of 10T SRAM Cell Storing value 1

In the 10T SRAM cell, during the write operation to store logic '1' at node Q, the bit line (BL) is driven high to 1.1V, while the word line (WL) is asserted high, turning ON the access transistor M9. This allows the high voltage from BL to be transferred to node Q, raising its voltage level. Simultaneously, the complementary node /Q is pulled low through the pull-down transistor M3. To enhance writing ability, a write-assist technique is employed using a voltage booster circuit formed by transistors M4 and M5, which strengthens the pull-down path by ensuring M3 is fully ON, helping discharge /Q quickly. Additionally, WLF (Write Line Forwarding) is asserted high to turn ON M6, which aids in quickly stabilizing the potential at QBF and supports the charging of Q. As Q reaches a high voltage and /Q a low voltage, the cross-coupled inverters (M1-M3 and M7-M8) latch this state, effectively storing the logic '1'. Once the WL signal goes low, M9 is turned OFF, isolating the internal nodes from the bit lines, and the SRAM cell retains the stored value '1' at Q due to the regenerative feedback of the cross-coupled inverters.

4.2 Writing 0 into 10T SRAM Cell

Writing 0:

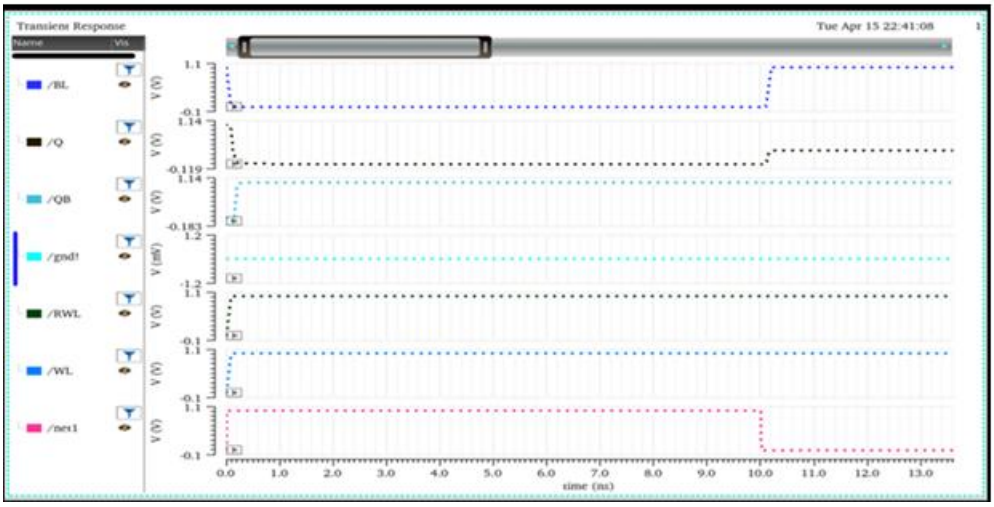

Figure-4.2 Output waveform of 10T SRAM Cell Storing value 0

in the 10T SRAM cell, during the write operation to store a logic '0' at node Q, the bitline (BL) is pulled low to 0V, and the word line (WL) is asserted high, turning ON the access transistor M9. This allows the low voltage on BL to be transferred directly to node Q, pulling it down toward ground. As Q discharges, the complementary node /Q is simultaneously pulled high through the cross-coupled inverter formed by M7 and M8, completing the storage of a logic '0' at Q and a logic '1' at /Q. To improve the write-‘0’ capability, the voltage booster circuit composed of transistors M4 and M5 becomes active when the write-assist signal (WLF) is high. This circuit strengthens the pull-down path of Q by enhancing the gate drive of M3, helping discharge Q more effectively. Additionally, when WLF goes high, transistor M6 is turned ON, reinforcing the charge transfer at node QBF and ensuring robust switching. From the waveform, around 8 ns, WL and WLF are asserted, and BL goes low, initiating the write. Q drops to 0V, and /Q rises to ~1.1V, indicating successful storage of '0' at Q. Once WL goes low (around 12 ns), the access transistor M9 is turned OFF, isolating the bit line, and the cross-coupled inverters latch the new state, thereby retaining the logic '0' at Q even after the write signals are deasserted.

Results obtained in CMOS and TIG FET technology:

Digital Circuit	CMOS 32nm			TIG FET 10nm		
Digital Circuit	Dynamic Power (W)	Static Power (W)	Time Delay (S)	Dynamic Power (W)	Static Power (W)	Time Delay (S)
10T SRAM	13.08u	11.8u	12p	4.05u	3.08u	4p

Table 4.1 Obtained values for 10T SRAM Circuit

4.1.2 AND Operation outputs

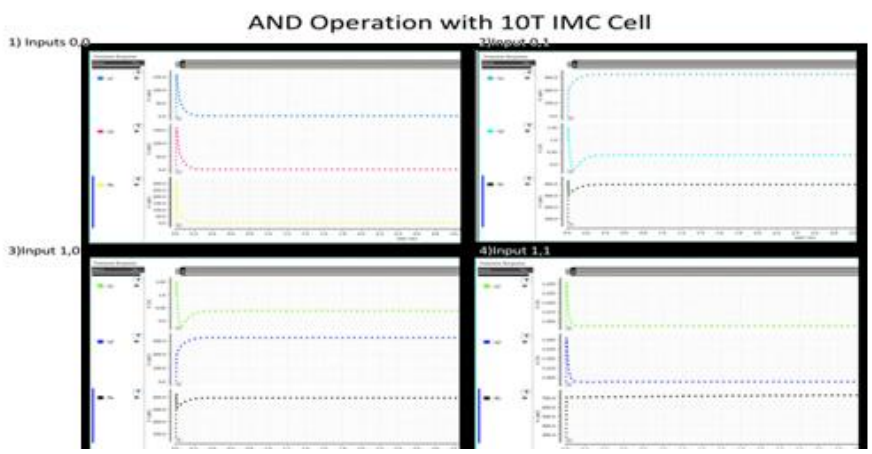

Figure-4.3 Output waveform of AND gate

The waveform results showcase the successful implementation of an AND logic operation using a 10T In-Memory Computing (IMC) SRAM cell. The operation is verified for all four input combinations: (0,0), (0,1), (1,0), and (1,1). For inputs (0,0), (0,1), and (1,0), the output remains at a low voltage level (logic '0'), indicating that the AND condition is not satisfied. In contrast, when both inputs are (1,1), the output transitions to a high voltage level (logic '1'), confirming that the condition for the AND operation is met only when both inputs are high. These results align precisely with the truth table of a standard AND gate, thus validating that the 10T IMC cell can effectively perform logic computation within memory, reducing the need to transfer data to external processing units and enabling energy-efficient computing.

Results obtained in CMOS and TIG FET technology:

Digital Circuit	CMOS 32nm			TIG FET 10nm		
Digital Circuit	Dynamic Power (W)	Static Power (W)	Time Delay (S)	Dynamic Power (W)	Static Power (W)	Time Delay (S)
AND	28.8u	21.8u	18p	6.08u	6.07u	8p

Table 4.2 Obtained values for AND Gate

4.1.3 OR Operation outputs

OR GATE outputs UsingIMC 10T SRAM Cell

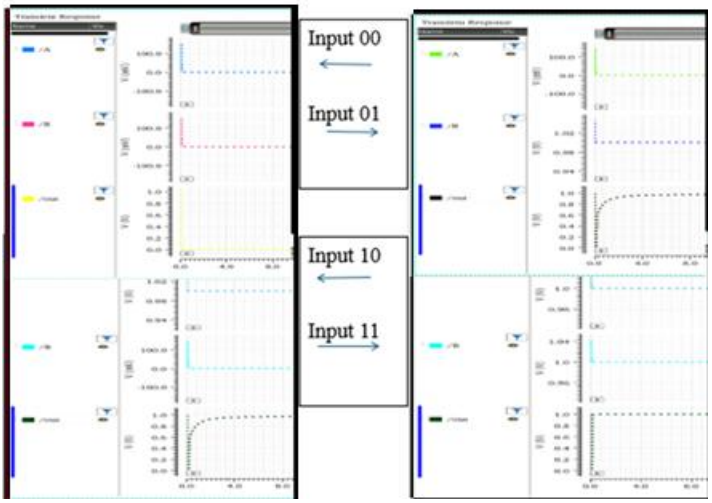

Figure-4.4 Output waveform of OR gate

The waveform results validate the OR logic operation using a 10T In-Memory Computing (IMC) SRAM cell for all possible input combinations: (0,0), (0,1), (1,0), and (1,1). When both inputs are (0,0), the output stays at a low voltage level (logic '0'), indicating that the OR condition is not met. However, for the input combinations (0,1), (1,0), and (1,1), the output rises to a high voltage level (logic '1'), confirming that the OR condition is satisfied whenever at least one of the inputs is high. This behavior exactly matches the OR gate truth table, demonstrating that the 10T IMC cell accurately performs OR logic operation directly within memory. This capability highlights the

efficiency and potential of IMC architecture in reducing data movement and power consumption in modern computing systems.

Results obtained in CMOS and TIG FET technology:

Digital Circuit	CMOS 32nm			TIG FET 10nm		
Digital Circuit	Dynamic Power (W)	Static Power (W)	Time Delay (S)	Dynamic Power (W)	Static Power (W)	Time Delay (S)
OR	32.8u	25.8u	21p	7.08u	7.07u	9p

Table 4.3 Obtained values for OR Circuit

4.1.4 Full Adder outputs

Input 010

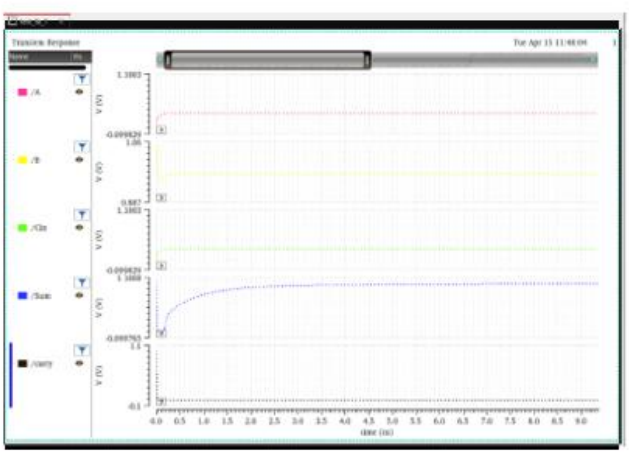

Input 100

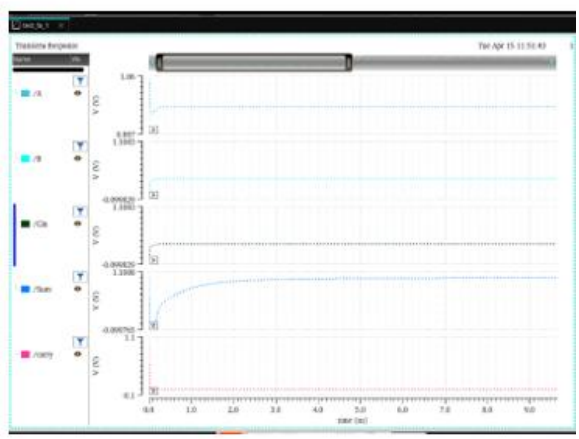

Figure-4.5 Output waveform of Full Adder

The two waveforms represent the behavior of a full adder circuit under two different input conditions. In the first case, inputs A, B, and Cin are all set to logic high (1'), as seen by the voltage levels near 1.1V. The resulting output shows the **Sum** as logic high (1') and **carry** as logic high (1'), which is the expected output for the input combination (1,1,1) since 1+1+1 = 3 (binary '11',

Sum = 1, Carry = 1). In the second case, A and B are at logic high (1') and Cin is at logic low (0'). The output shows **Sum** as logic low ('0') and **Carry** as logic high (1'), correctly representing the binary addition 1+1+0 = 2 (binary '10', Sum = 0, Carry = 1). These results verify the correct functioning of the full adder cell for different input vectors.

Results obtained in CMOS, FIN FET and TIG FET technology:

Digital Circuit	CMOS 32nm			TIG FET 10nm		
Digital Circuit	Dynamic Power (W)	Static Power (W)	Time Delay (S)	Dynamic Power (W)	Static Power (W)	Time Delay (S)
Full adder	253u	211u	28p	30.3u	3.3u	15p

Table 4.4 Obtained values for Full adder Circuit

4.1.5 2x1 MUX outputs

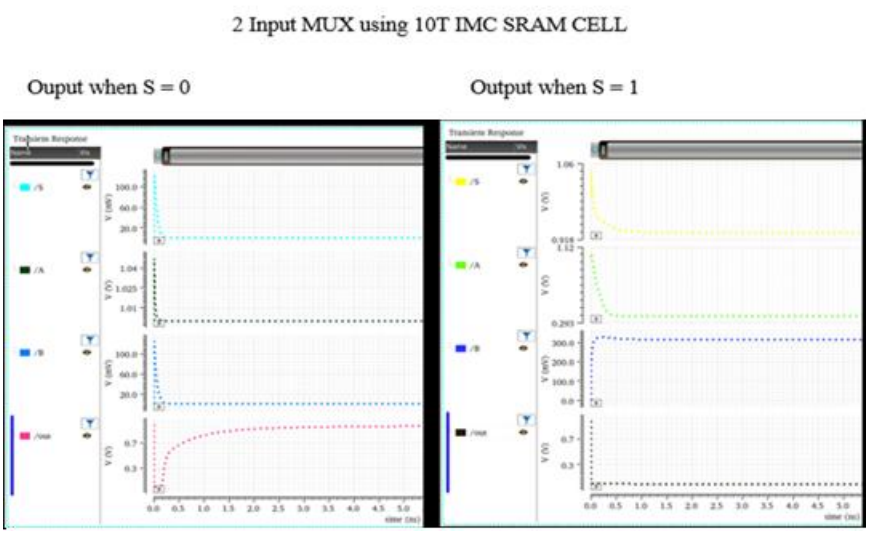

Figure-4.6 Output waveform of MUX

This image illustrates the transient response of a 2-input multiplexer (MUX) implemented using a 10-transistor (10T) IMC SRAM cell. The MUX selects between two inputs, A and B, based on the control signal S. On the left side of the image, where **S = 0**, the output (/OUT) follows the input **A**. This is confirmed by the voltage levels: while input B holds a high voltage, /OUT reflects the lower voltage of A, validating that A is selected. On the right side, where **S = 1**, the output /OUT

switches to follow input **B**, which now matches the voltage level of B while ignoring A. The waveforms confirm correct MUX behavior, where the output accurately reflects the selected input based on the value of the selection line S. This demonstrates proper functionality of the MUX design using the 10T IMC SRAM structure

Results obtained in CMOS and TIG FET technology:

Digital Circuit	CMOS 32nm			TIG FET 10nm		
Digital Circuit	Dynamic Power (w)	Static Power (w)	Time Delay	Dynamic Power	Static Power	Time Delay
MUX	69u	40u	10p	27.9u	14u	6p

Table 4.5 Obtained values for MUX Circuit

4.5 Table Showing results

Digital Circuit	CMOS 32nm			TIG FET 10nm		
Digital Circuit	Dynamic Power (w)	Static Power (w)	Time Delay	Dynamic Power	Static Power	Time Delay
10T SRAM	13.08u	11.8u	12p	4.05u	3.08u	4p
AND	28.8u	21.8u	18p	6.08u	6.07u	8p
OR	32.8u	25.8u	21p	7.08u	7.07u	9p
FULL ADDER	253u	211u	28p	30.3u	3.3u	15p
MUX	69u	40u	10p	27.9u	14u	6p

Chapter 5. Conclusion

5.1Introduction:

As the demand for energy-efficient and high-performance digital circuits grows, novel transistor technologies are being explored to overcome the limitations of traditional CMOS. **Three-Independent-Gate FETs (TIGFETs)** provide enhanced control over channel conduction, enabling reduced dynamic and static power consumption as well as lower delay. The following comparison illustrates the advantages of using TIGFETs over conventional designs in several key digital circuits.

5.2 10T SRAM:

The TIGFET-based 10T SRAM shows significantly lower dynamic and static power (4.05 µW and 3.08 µW) compared to the conventional version (13.08 µW and 11.8 µW). The delay is also reduced from 12 ps to 4 ps, demonstrating TIGFET's superior energy efficiency and speed.

5.3 AND Gate:

In the AND gate, TIGFET achieves a notable reduction in both dynamic (from 28.8 µW to 6.08 µW) and static power (from 21.8 µW to 6.07 µW), along with a decrease in delay from 18 ps to 8 ps. This clearly shows that TIGFETs offer better performance with much lower power consumption.

5.4 OR Gate:

The TIGFET-based OR gate consumes significantly less dynamic (7.08 µW vs. 32.8 µW) and static power (7.07 µW vs. 25.8 µW), while also improving speed with a reduced delay of 9 ps compared to 21 ps. This indicates TIGFET's effectiveness in power-sensitive logic design.

5.5 Full Adder:

TIGFETs dramatically lower the dynamic and static power in the full adder circuit from 253 µW and 211 µW to just 30.3 µW and 3.3 µW, respectively. The delay is also halved from 28 ps to 15 ps. This shows TIGFET's capability to enable energy-efficient and faster arithmetic circuits.

5.6 MUX:

The multiplexer with TIGFET technology operates at lower power (dynamic: 27.9 µW vs. 69 µW, static: 14 µW vs. 40 µW) and has a faster response time (6 ps vs. 10 ps). This reflects TIGFET's advantage in both speed and power reduction

5.7 Future Scope

The future of in-memory computing lies in the continued development of hybrid architectures that combine SRAM and NVM technologies to exploit the advantages of both speed and non-volatility. Research will likely focus on optimizing cell designs for higher reliability, lower power, and greater scalability to meet the demands of AI, edge computing, and IoT applications. Enhancing design automation tools for IMC circuit synthesis, improving error resilience, and integrating machine learning models at the hardware level are also key directions. Moreover, with advancements in 3D integration and emerging materials, the potential for highly dense and programmable in-memory processing units will grow, paving the way for a new era of energy-efficient and intelligent computing systems.

References:

1. In-Memory Computing: Advances and Prospects

2.Fast and Energy Efficient (0.01-2.78 aJ) Logic In Memory Module using SRAM Cells

3. An Energy-Efficient and Robust 10T SRAM Based in-Memory Computing Architecture

4. Two-Direction In-Memory Computing Based on 10T SRAM With Horizontal and Vertical Decoupled Read Ports

5. Novel In-Memory Computing Adder Using 8 SRAM

6. Implementation of Boolean and Arithmetic Functions with 8T SRAM Cell for In-Memory Computation

7. Smart Logic-in-Memory Architecture for Low-Power Non-Von Neumann Computing

8. The Programmable Logic-in-Memory (PLiM) Computer